Damper actuator for operating air control dampers in ventilation and air-conditioning systems for building services installations

- For air control dampers up to approx. 2 $m^2$
- Torque 10 Nm
- Nominal voltage AC/DC 24 V
- Control: via BACnet® MS/TP

## Technical data

| | | | |
|---|---|---|---|
| Electrical data | Nominal voltage | | AC 24 V, 50/60 Hz<br>DC 24 V |
| | Nominal voltage range | | AC/DC 19,2 ... 28,8 V |
| | Power consumption | In operation<br>At rest<br>For wire sizing | 2.0 W @ nominal torque<br>0.25 W<br>4 VA |
| | Connection | | Cable 1 m, 6 x 0.75 $mm^2$ , color: black<br>bus cable 1 m, 1 x 2 x 0,5 mm, color: violet |
| Functional data | Torque (nominal torque) | | Min. 10 Nm @ nominal voltage |
| | Direction of rotation | | Selectable by switch |
| | System control | | via BACnet® MS/TP, 2400 … 115200 Baud |
| | Input | AI1 - selectable | Sensor input: (Pt1000, Ni1000 DIN, Ni1000TK5000)<br>or digital input - measuring range see on page 2 |
| | | AI2 - selectable | Sensor input: (Pt1000, Ni1000 DIN, Ni1000TK5000)<br>or digital input - measuring range see on page 2 |
| | | AI3 - selectable | Analog input 0 ... 10 V<br>or manual control 2 ... 10 V or forced OPEN / CLOSE |
| | Manual override | | Gearing latch disengaged with pushbutton, self-resetting |
| | Angle of rotation | | Max. 95°∢, limited on both sides<br>by means of adjustable, mechanical end stops |
| | Running time | | 150 s |
| | Sound power level | | Max. 35 dB (A) |
| | Position indication | | Mechanical, pluggable |
| Safety | Protection class | | III Safety extra-low voltage |
| | Degree of protection | | IP54 in any mounting position |
| | EMC | | CE according to 89/336/EEC |
| | Mode of operation | | Type 1 (to EN 60730-1) |
| | Ambient temperature range | | –30 ... +50°C |
| | Non-operating temperature | | –40 ... +80°C |
| | Ambient humidity range | | 95% r.H., non-condensating (EN 60730-1) |
| | Maintenance | | Maintenance-free |
| Dimensions / Weight | Dimensions | | See «Dimensions» on page 2 |
| | Weight | | Approx. 1000 g |

## Safety notes

- The damper actuator is not allowed to be used outside the specified field of application, especially in aircraft or any other form of air transport.
- Assembly must be carried out by trained personnel. Any legal regulations or regulations issued by authorities must be observed during assembly.
- The device may only be opened at the manufacturer's site. It does not contain any parts that can be replaced or repaired by the user.
- The cable must not be removed from the device.
- When calculating the required torque, the specifications supplied by the damper manufacturers (cross section, design, installation site), and the air flow conditions must be observed.
- The device contains electrical and electronic components and is not allowed to be disposed of as household refuse. All locally valid regulations and requirements must be observed.
- For the BACnet® MS/TP connection it has to be used an appropriate specified cable.

DEOS.AG

## Product features

| | |
|---|---|
| Simple direct mounting | Simple direct mounting on the damper spindle with a universal spindle clamp, supplied with an anti-rotation strap to prevent the actuator from rotating. |
| Manual override | Manual operation is possible with the self-resetting pushbutton (the gearing latch remains disengaged as long as the pushbutton is pressed). |
| Adjustable angle of rotation | Adjustable angle of rotation with mechanical end stops. |
| High functional reliability | The actuator is overload-proof, requires no limit switches and automatically stops when the end stop is reached. |

## Accessories

| | Description |
|---|---|
| Electrical accessories | Auxiliary switch S..A.. |
| | Feedback potentiometer P..A.. |
| Mechanical accessories | Various accessories (clamps, shaft extensions etc.) |

## Electrical installation

Note
- Connection via safety transformer.
- Parallel connection of further drives possible.
- Regard the power data.

### Direction of rotation

The switch for changing the direction of the drive is located under the dummy plug at the front side of the drive.

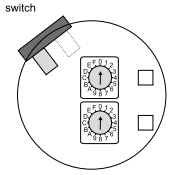


| Switch | Direction of rotation | |
|---|---|---|
| | right | 100 % at stop unit on the right side |
| | left | 100 % at stop unit on the left side |

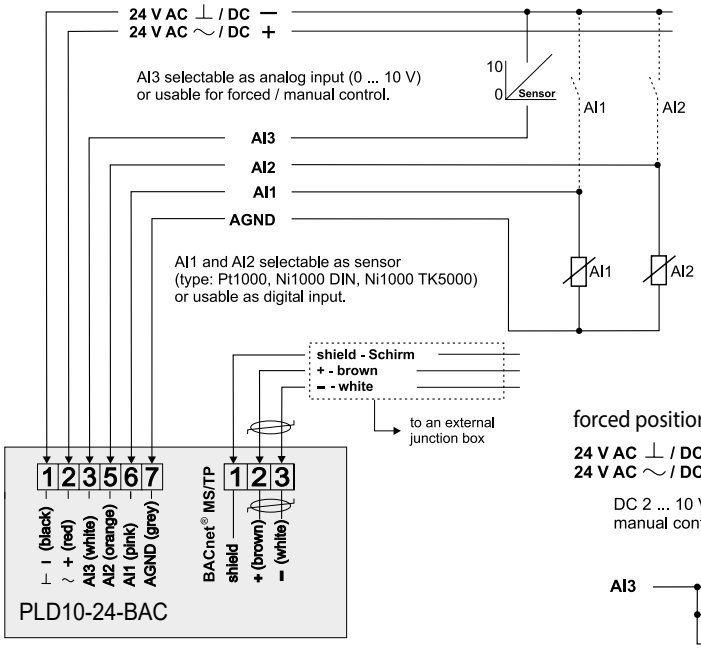


### Analog Input AI3

If a sensor is not connected to the input (open input), it will be 15 V DC high-ohmic at AI3.
If a sensor will be connected to the AI, the potential has to be reduced to the needed sensor value by the connected sensor.
The qualification of the sensor has to be checked before connecting it.

### forced position

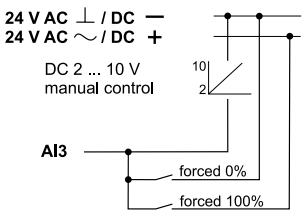


## Dimensions [mm]

Dimensional drawing

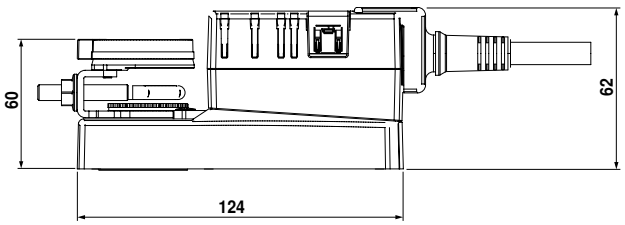


right turning

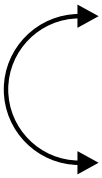

left turning

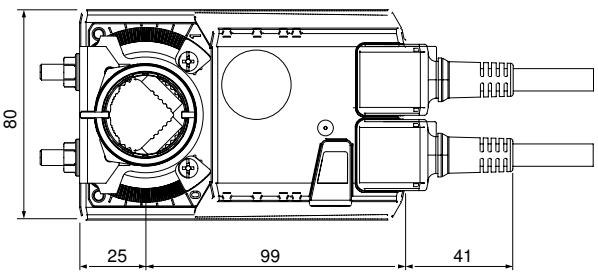


| flap axle | length | |
|---|---|---|
| terminal block on top | min. 40 | 8 ... 26,7 |

## Analog inputs - measuring range

| AI1 - selectable | |
|---|---|
| Sensor input Pt1000 | -20 ... +120 °C |
| or Sensor input Ni1000 DIN | -15 ... +75 °C |
| or Sensor input Ni 1000 Tk5000 | -15 ... +90 °C |
| or Digital input | |

| AI2 - selectable | |
|---|---|
| Sensor input Pt1000 | -20 ... +120 °C |
| or Sensor input Ni1000 DIN | -15 ... +75 °C |
| or Sensor input Ni 1000 Tk5000 | -15 ... +90 °C |
| or Digital input | |

| AI3 - selectable | |
|---|---|
| Analog input | 0 .. 10 V |
| or Manual control | 2 ... 10 V |
| or Forced | OPEN / CLOSE |

Data sheet PLD10-24-BAC • EN • 31.11.2012 • Subject to changes

## Addressing CAN-bus

Position address switches

The address switches are located under the dummy at the front side of the drive.

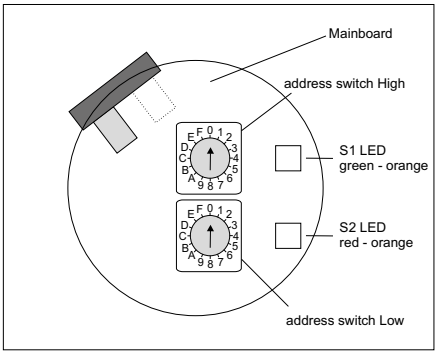


Depending on the controller, up to 99 bus devices can be connected to each CAN-bus. The setting of the module address is set via two address switches (High and Low). On operation at a COSMOS
controller select the addresses from 01 to 99 for the COSMOS IO modules and for the room control units (e.g. IO7, CORA, GALAXY One) the addresses from 01 to 96 according the FUP XL programming. Only the decimal digits of the address switches will be used.

Standard address range

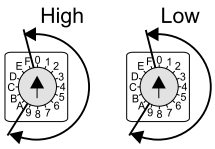


Standard address range: Example to set the address 12

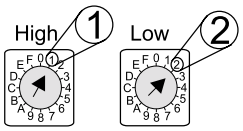


Standard address range

The CAN modules are equipped with a service mode to set the speed of the CAN-bus. The service mode will be activated by setting the address switches to FF.

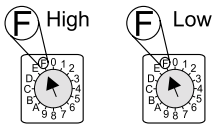


## Settings of ths CAN-bus

Notes:

- After each change of the position of the address switches the orange flash signal of the lower LED (S2) has to be controlled.
- All devices at the MS/TP bus must be set to the same speed. The communication won´t work if only one device would be set to another speed!

At the CAN module are two LEDs (S1 and S2) which indicates among others the twisting of the address switches. Once one of the two address switches is twisted, both LEDs light up orange. After approx.
3 sec. the LEDs turn off, signaling the adoption of the switch position by the module. In normal operation the green - orange LED (S1) flashes regularly green. Once the module is in service mode the currently set baudrate is displayed or a new can be set. This requires that the address switch is set to one of the positions which are listed, in the table below. The currently set, or desired speed is indicated by the flashing of the red LED. One short flash pulse signals 10 kBit/s, two flashes 20 kBit/s etc.
Baudrates of 10 kBit/s, up to 125 kBit/s are supported.

| Position of the address switches | CAN-bus speed | Signal of LED S2 |
|---|---|---|
| DF | current display of the speed | |
| D1 | 10 kBit/s | |
| D2 | 20 kBit/s | |
| D3 | 50 kBit/s | |
| ... | ... | ... |

If a new baudrate should be adjusted (D1 .. Dx), then the new baudrate must be confirmed by the switch setting AA. In this position the newly set baudrate is displayed again via the flashing of the red LED (S2). The module indicates with this confirmation that it has accepted the desired baudrate.
The address of the COSMOS IO module can then be switched back directly to a valid operation address whereby the service mode is exited automatically.

Example1 Changing of the CAN-bus speed to 20 kBit/s

Step 1

**Start service mode FF**

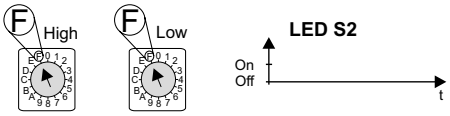


Step 2

**Setting speed D2**

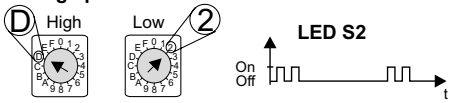


Step 3

**Confirmation of the set speed**

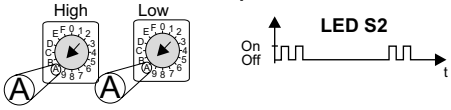

## Assembly instruction

1

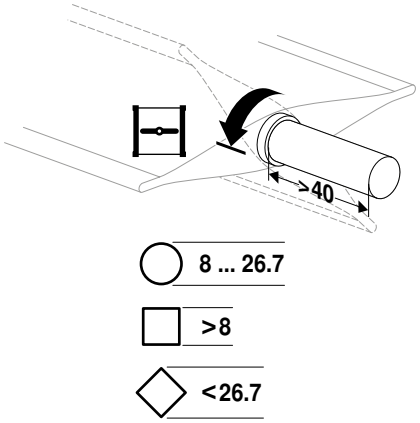


2

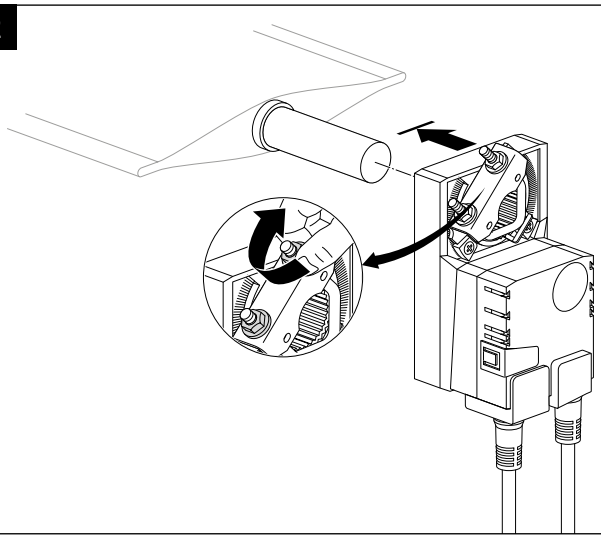

3

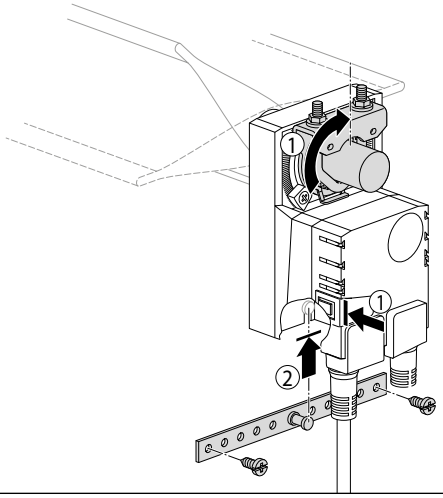


4

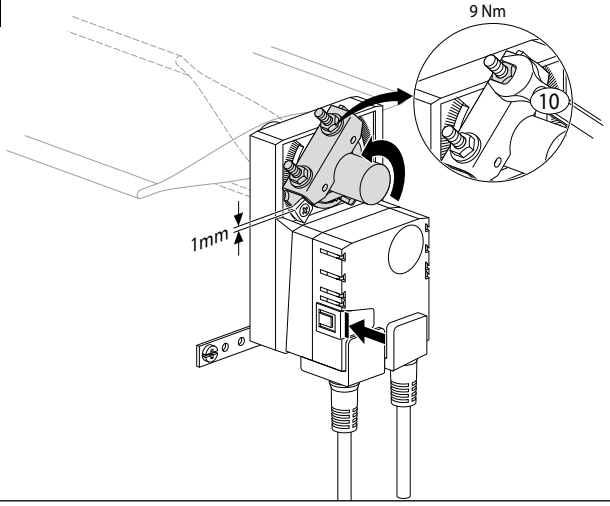


5

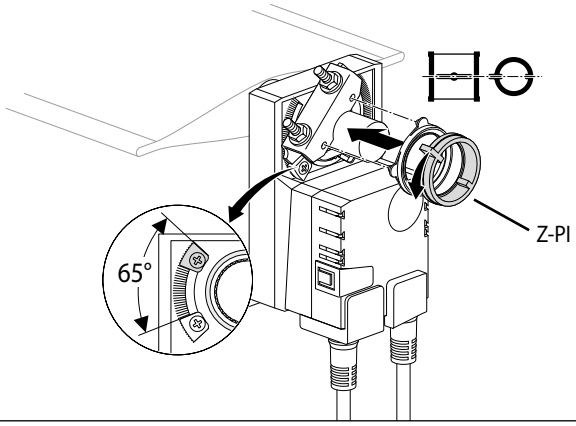


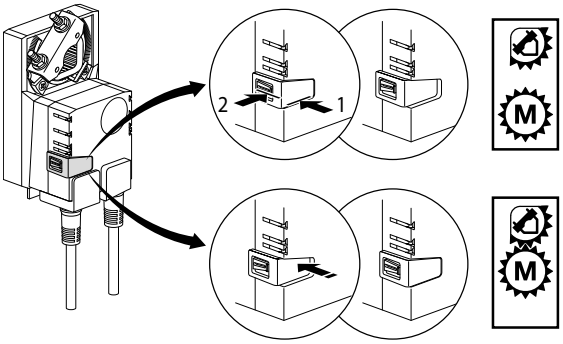


Data sheet PLD10-24-BAC • EN • 31.11.2012 • Subject to changes